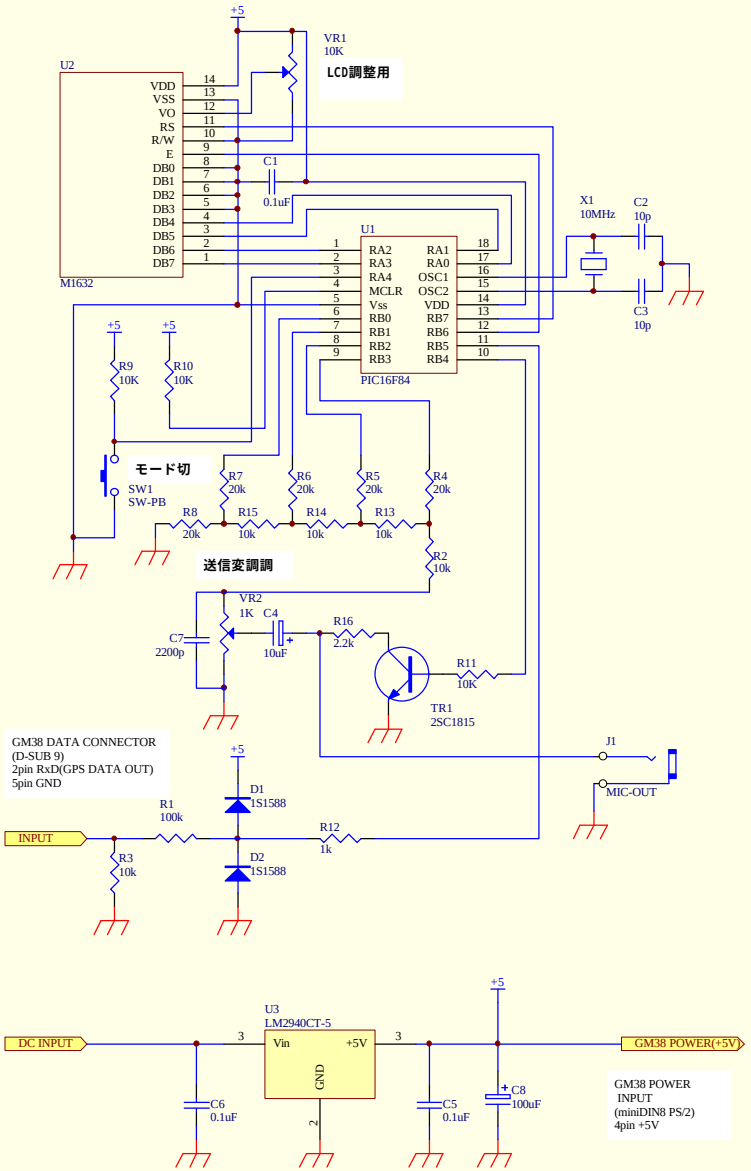

Title		
Size B	Number	Revision
Date: 3-Feb-2000		Sheet of
File: D:\CAD\GM38DISP.SCH		Drawn By: