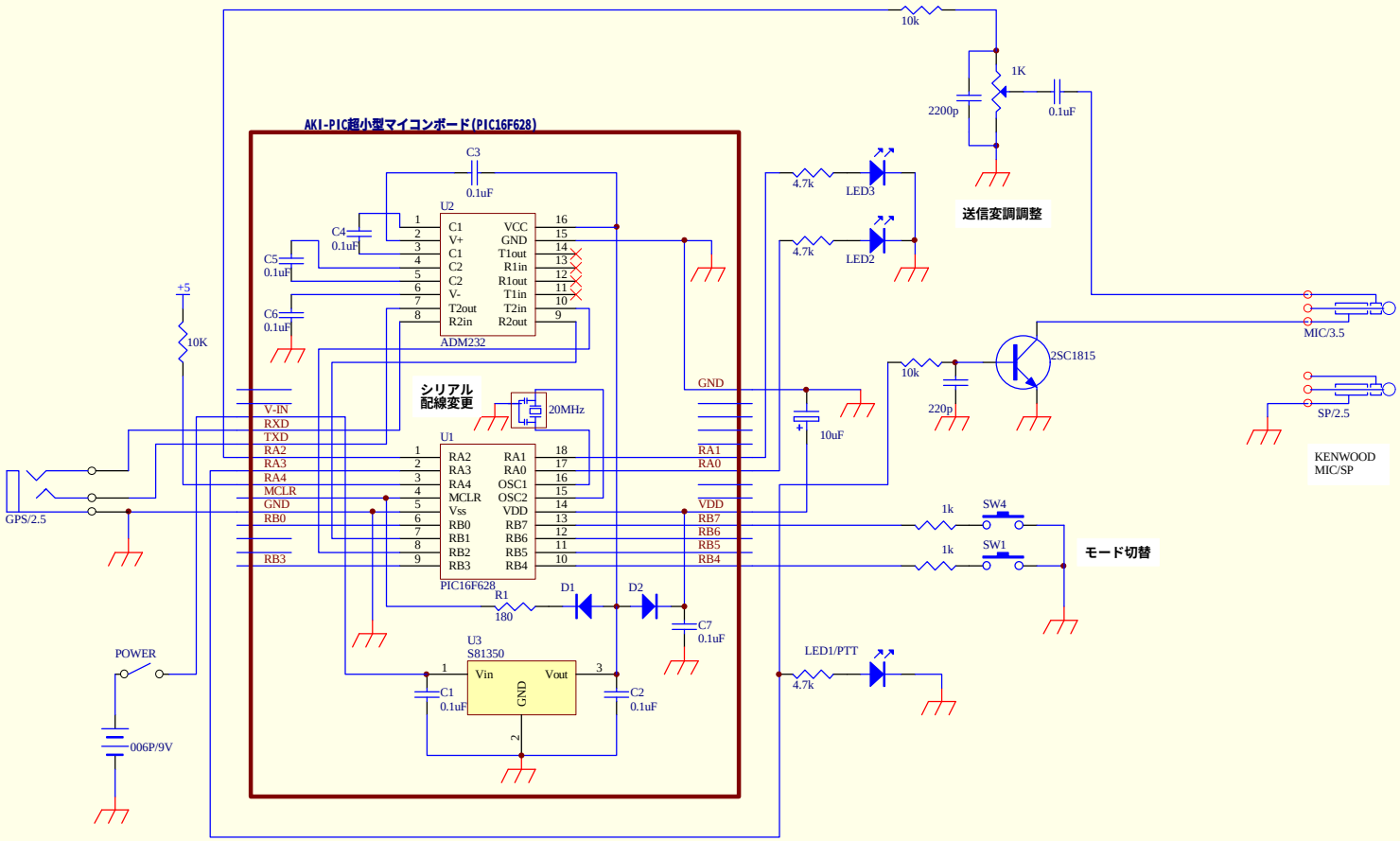

Title		
Size B	Number	Revision
Date: 18-Aug-2002		Sheet of
File: D:\CAD\GPS\GM38DI~1.SCH		Drawn By: