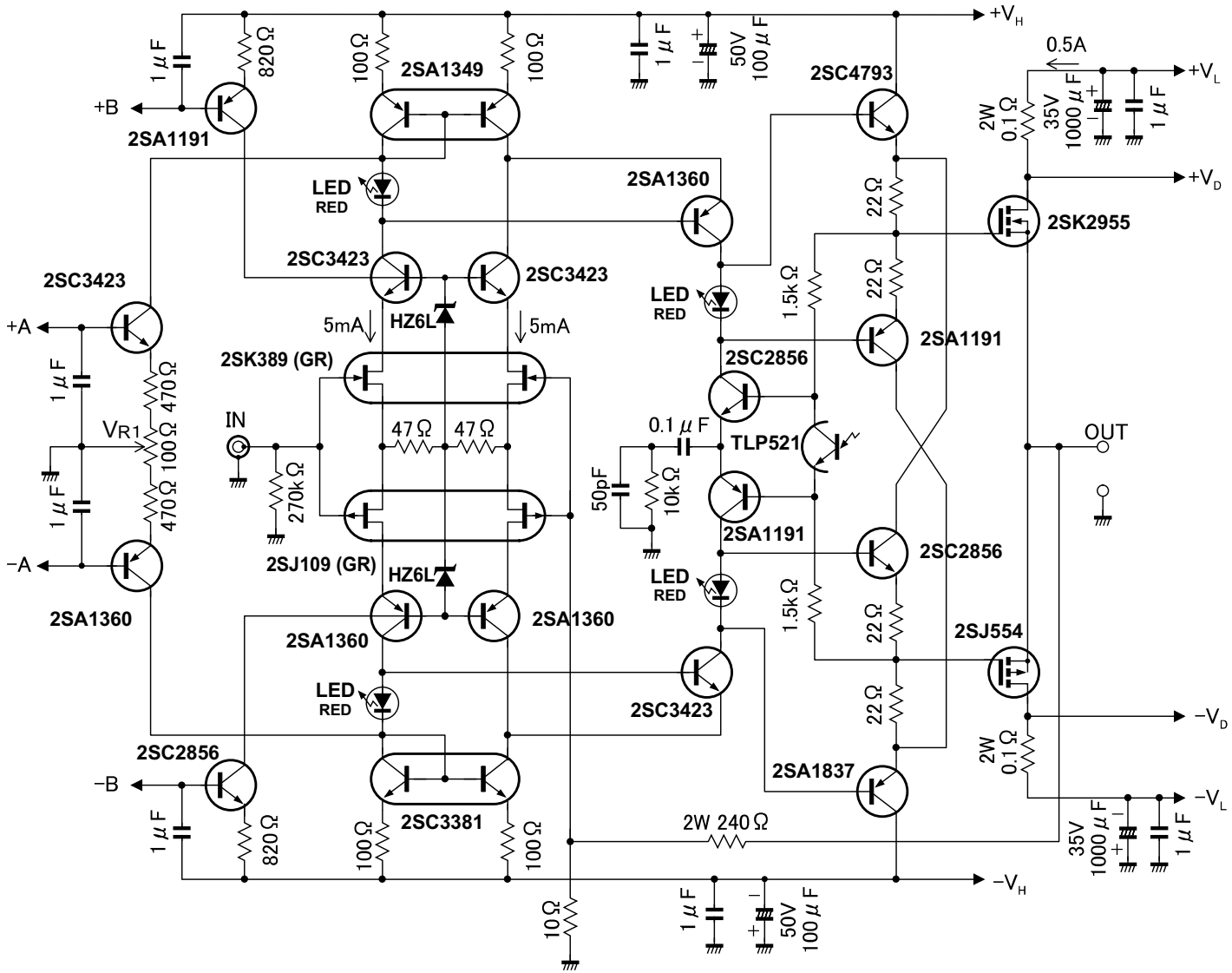
+V_H
0.5A
+V_L
+V_D
2SK2955
2SC4793
2SA1360
2SA1191
2SC2856
TLP521
2SA1191
2SC2856
2SJ554
2SA1837
2SC3423
-V_D
-V_L
-V_H
+B
2SA1191
2SC3423
+A
2SA1360
-A
-B
2SC2856
2SA1349
2SC3423
2SC3423
2SA1360
2SA1360
2SC3381
HZ6L
HZ6L
2SK389 (GR)
2SJ109 (GR)
LED RED
LED RED
LED RED
LED RED
5mA
5mA
IN
OUT
VR1
820Ω
100Ω
470Ω
47Ω
270kΩ
1.5kΩ
22Ω
10kΩ
50pF
0.1μF
1μF
50V 100μF
35V 1000μF
2W 0.1Ω
2W 240Ω
10Ω