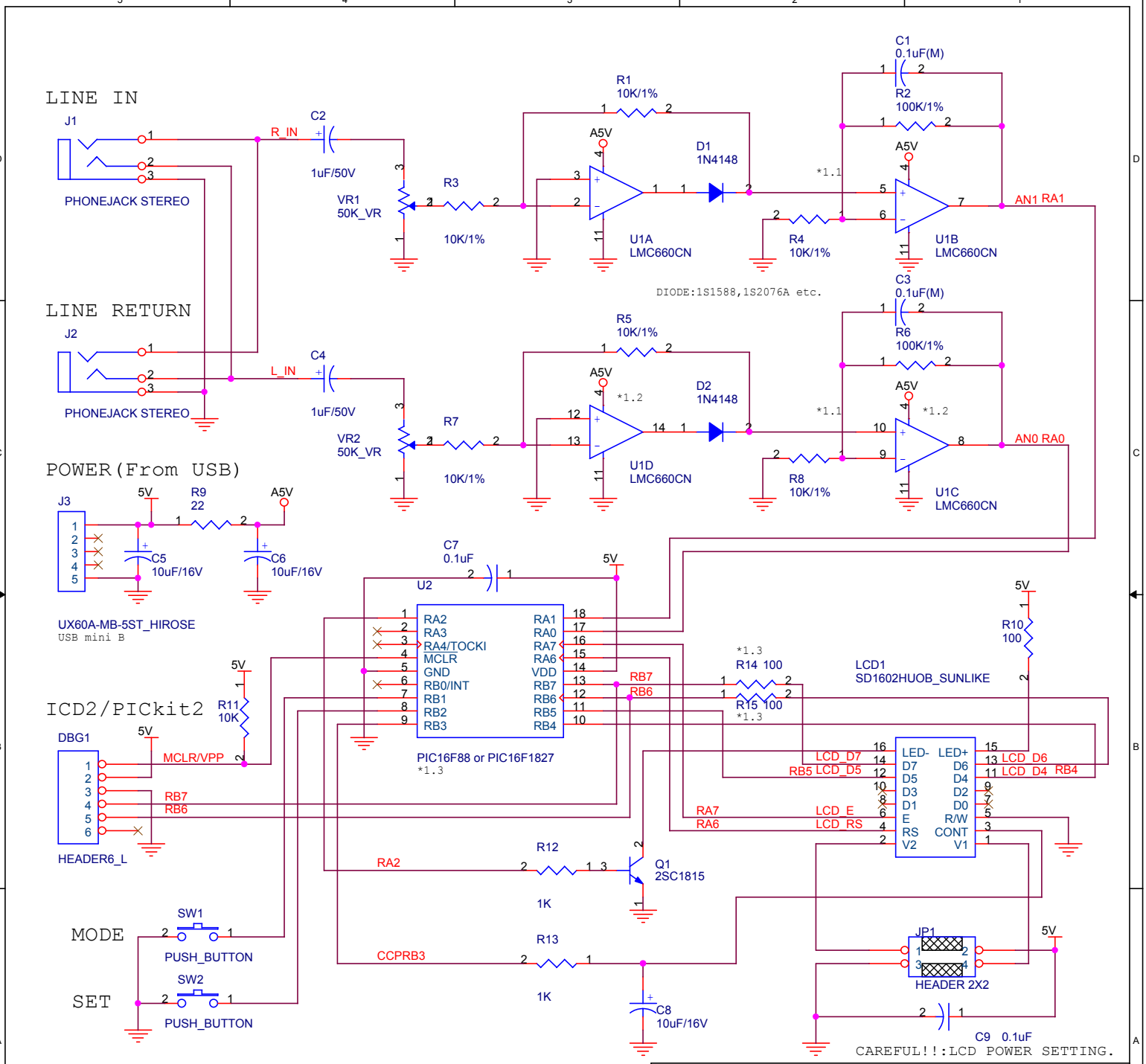

20110807 *1.3 Add isolation resisters R14,R15 100 ohm , and corresponded PIC16F1827.
20090117 *1.2 Changed package designator U1C and U1D.

Title	LCD VU Meter(48 steps)	
Size Custom	Document Number (C)2009 air_variable http://www.ne.jp/asahi/air/variable/	Rev 1.3
Date: Sunday, August 07, 2011	Sheet 1 of 1	